FACSCalibur (BD)

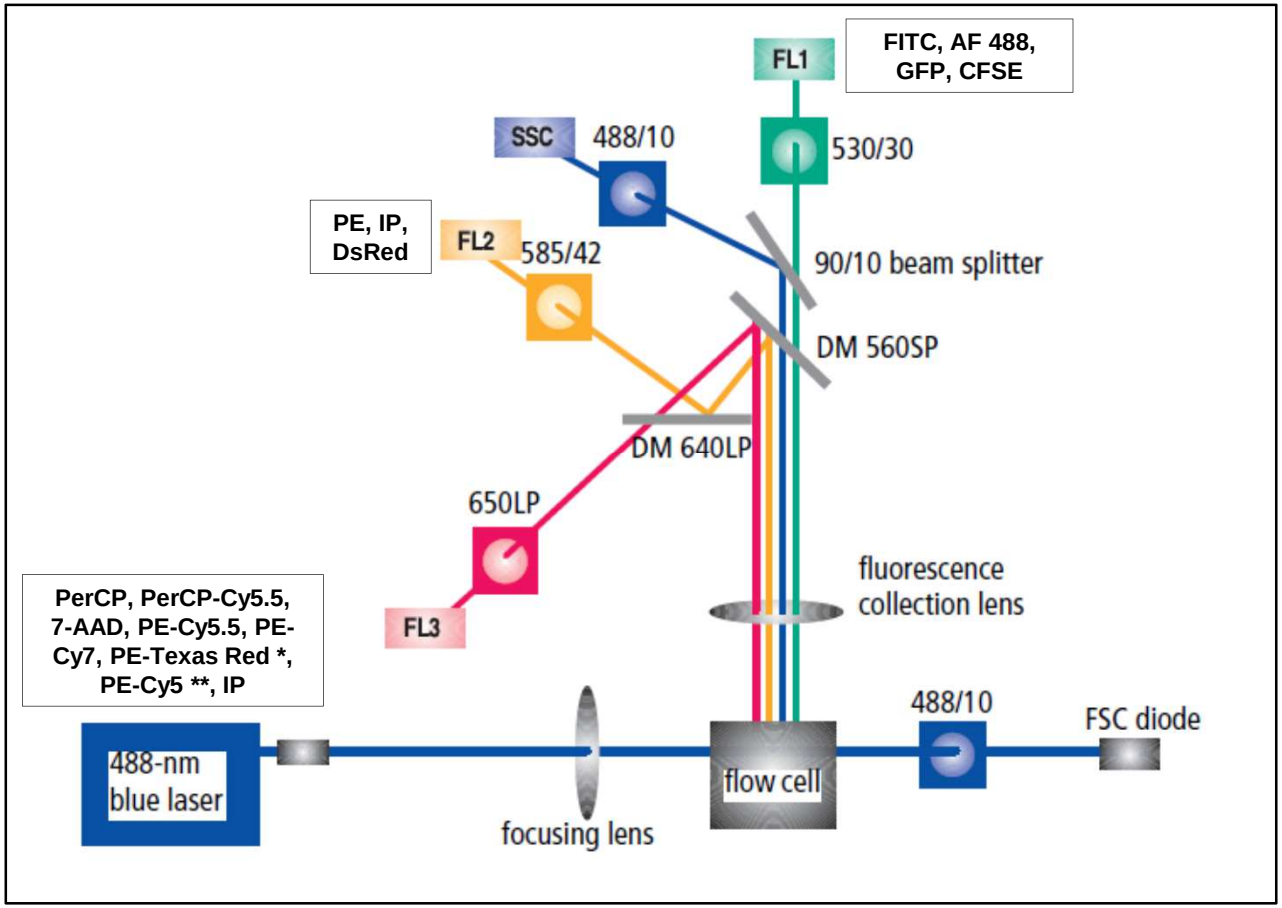

* Not recommended. Extant optical filters result in dull expression of PE-Texas Red conjugates on FACSCalibur flow cytometer.

** PE-Cy5 conjugates are known by a confusing myriad of names to include:
- Becton Dickinson's CyChrome
- Caltag and Sigma's Tri-Color
- Coulter's PC5